MT321 /MT321P

Mini PCIe Card
Quick Installation Guide

Safety Information

1. Electrical safety

- To prevent electrical shock hazard, disconnect the power cable from the electrical outlet before relocating the system.
- When adding or removing devices to or from the system, ensure that the power cables for the devices are unplugged before the signal cables are connected. If possible, disconnect all power cables from the existing system before you add a device.
- Before connecting or removing signal cables from the motherboard, ensure that all power cables are unplugged.
- Seek professional assistance before using an adapter or extension cord. These devices could interrupt the grounding circuit.
- Make sure that your power supply is set to the correct voltage in your area.
- If you are not sure about the voltage of the electrical outlet you are using, contact your local power company.
- If the power supply is broken, do not try to fix it by yourself. Contact a qualified service technician or your local distributor.

2. Operation safety

- Before installing the motherboard and adding devices on it, carefully read all the manuals that came with the package.
- Before using the product, make sure all cables are correctly connected and the power cables are not damaged. If you detect any damage, contact your dealer immediately.
- To avoid short circuits, keep paper clips, screws, and staples away from connectors, slots, sockets and circuitry.
- Avoid dust, humidity, and temperature extremes. Do not place the product in any area where it may become wet.
- Place the product on a stable surface.
- If you encounter any technical problems with the product, contact your local distributor

Statement

- All rights reserved. No part of this publication may be reproduced in any form or by any means, without prior written permission from the publisher.
- All trademarks are the properties of the respective owners.
- All product specifications are subject to change without prior notice

Revision History

Revision	Date(yyyy /mm/dd)	Changes
Version 1.0	2015/06/04	Initial release
Version 1.1	2016/07/04	Correct pin define
Version 1.2	2016/08/24	Add MT321-M20
Version 1.3	2019/12/18	Add MT321-P

Packing list:

- ☐ MT321 Mini PCIe Card * 1pc
- ☐ Board to Board LAN cable * 1pc
- ☐ CD (Driver + quick installation guide)

Optional Accessories:

- MT321-M, 2 x M12 Gigabit Ethernet Adapter for MT321,
- MT321-R, 2 x RJ45 Gigabit Ethernet Adapter for MT321
- MT321-M20, 2 x M20 Metal Shielded RJ45 Gigabit Ethernet Adapter for MT321
- MT321-P, 2 x Pin Header Adapter for MT321

If any of the above items is damaged or missing, please contact your local distributor.

Ordering Information:

Model Number	Description
MT321	Mini PCIe Gigabit Ethernet Network Card Trans to Two LAN with Golden Finger, Temperature -40 to 85°C
MT321-M	2 x M12 Gigabit Ethernet Adapter for MT321, Extended Temperature -40 to 85°C (Optional)
MT321-R	2 x RJ45 Gigabit Ethernet Adapter for MT321, Extended Temperature -40 to 85°C (Optional)
MT321-M20	2 x M20 Metal Shielded RJ45 Gigabit Ethernet Adapter for MT321, Extended Temperature -40 to 85°C (Optional)
MT321-P	2 x (2*15 Box Header Adapter) for MT321, Extended Temperature -40 to 85° C (Optional)

Table of Contents

Chapter 1: Product Information
Safety Information 1
1. Electrical safety 1
2. Operation safety 1
Statement 1
Revision History 2
Packing list: 2
Optional Accessories: 2
Ordering Information: 2
Table of Contents 3
Chapter 1: Product Information 4
1.1 Block Diagram 4
1.2 Specifications 4
1.3 Board Placement 5
MT321 5
MT321-M 5
MT321-R 6
MT321-M20 6
1.4 Mechanical Drawings 7
MT321 7
MT321-M 8
MT321-R 8
MT321-M20 8
Chapter 2: Connectors pin definition 9
2.1 Connectors list 9
2.2 Connector pin definition 9
J1: board to board connector 9
LAN1, LAN2: M12 connector 9
LAN2: RJ45 connector 10
2.3 MT321-P 11
Chapter 3: Getting Started 12
3.1 Installing the Mini PCIe module 12
3.2 Connect MT321 and MT321-R 13
3.3 Connect MT321 and MT321-M 13
3.4 Connect MT321 and MT321-M20 13

Chapter 1: Product Information

1.1 Block Diagram

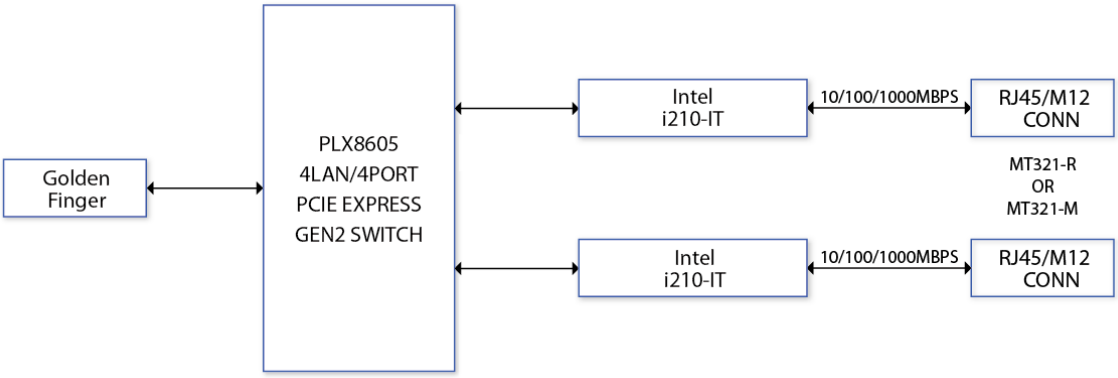

1.2 Specifications

Bus Type	Mini PCI Express
Chipset ID	Intel® i210IT
Number of Ports	2 x GbE
Transfer Rate	10/100/1000 Mbps
Dimensions	30 x 52 mm (W x L)
Environment	Operating Temperature: -40 to 85°C Storage Temperature: -40 to 85°C
OS Compatibility	Windows Vista/2012/7/8

***All specifications and photos are subject to change without notice.**

1.3 Board Placement

MT321

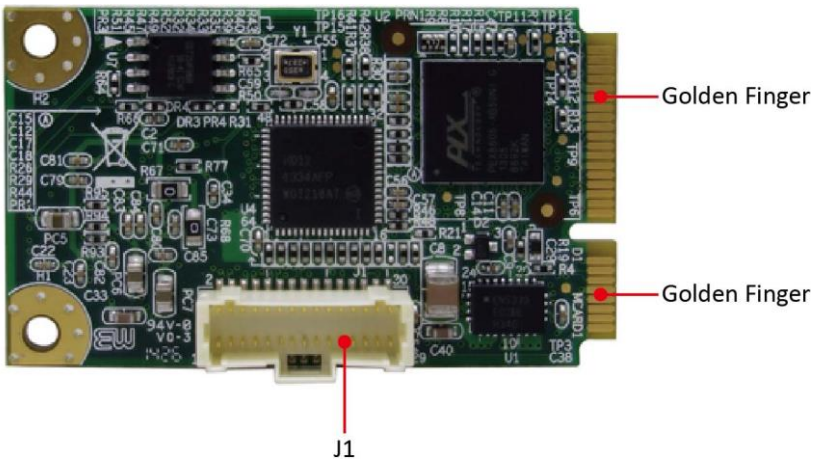

MT321-M

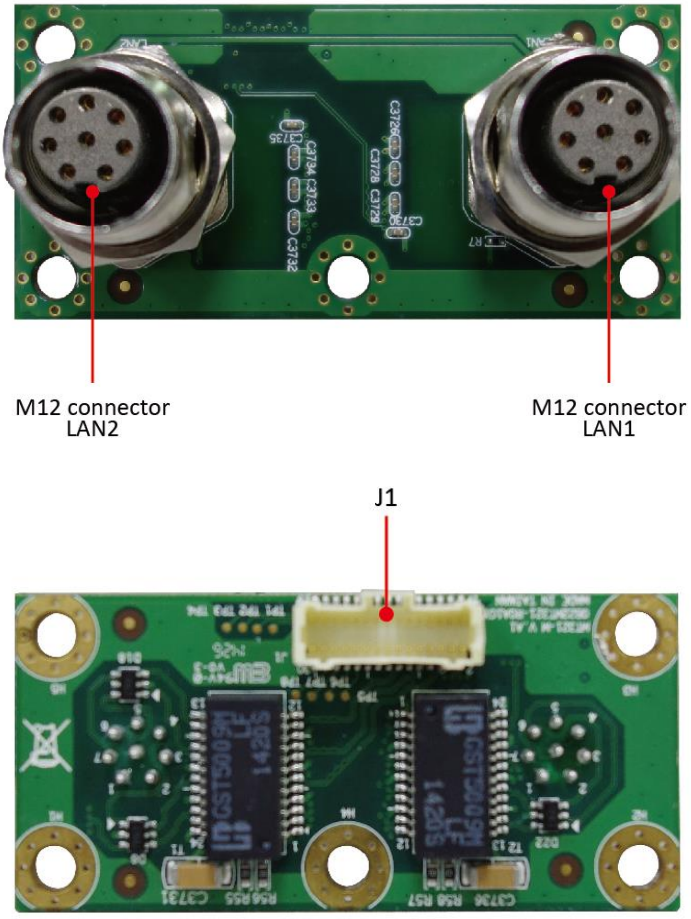

MT321-R

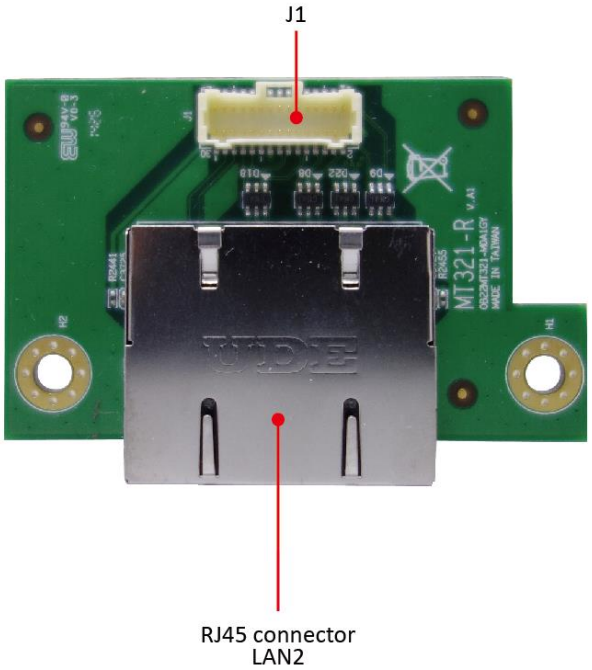

MT321-M20

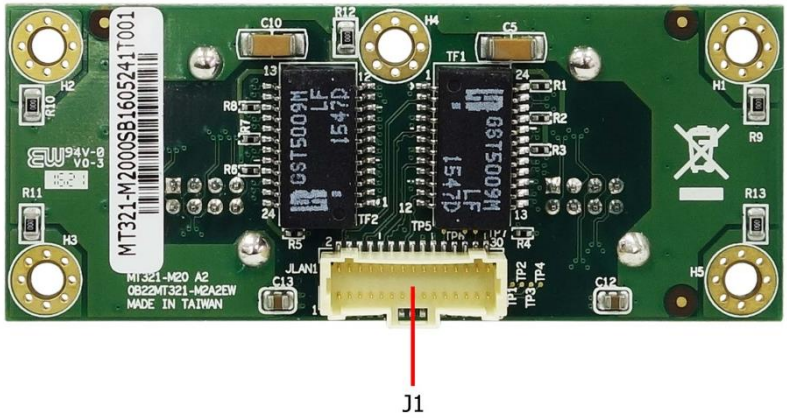

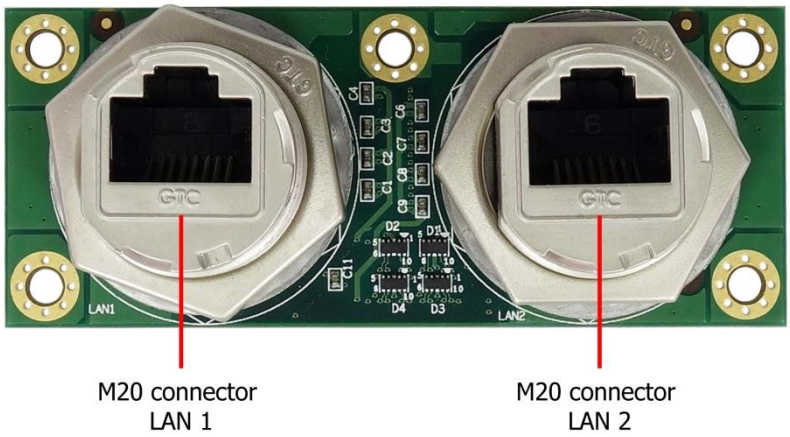

1.4 Mechanical Drawings

MT321

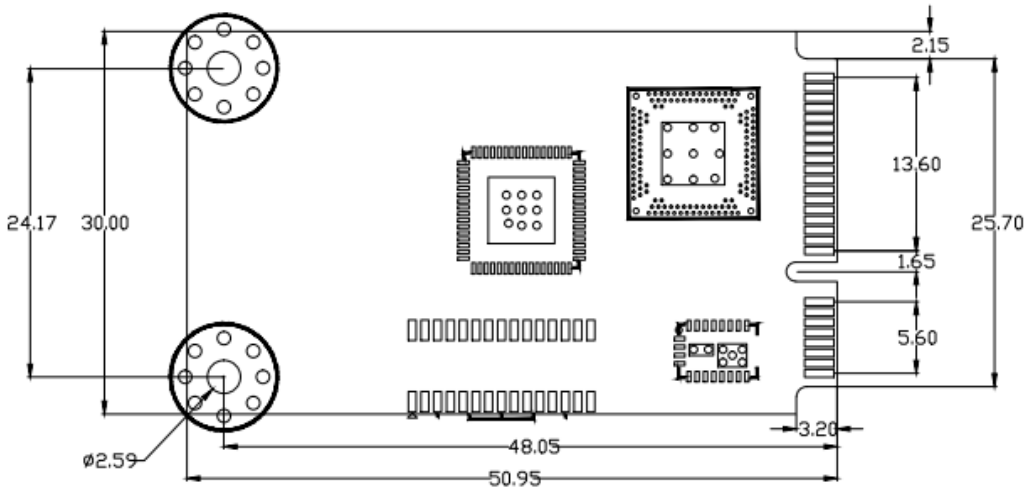

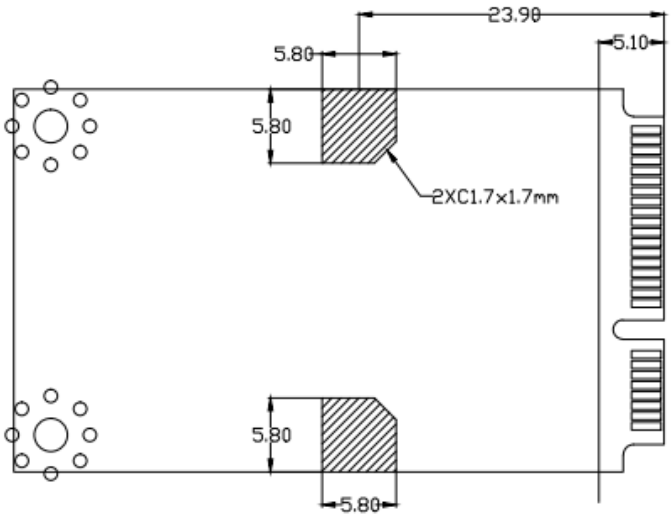

MT321-M

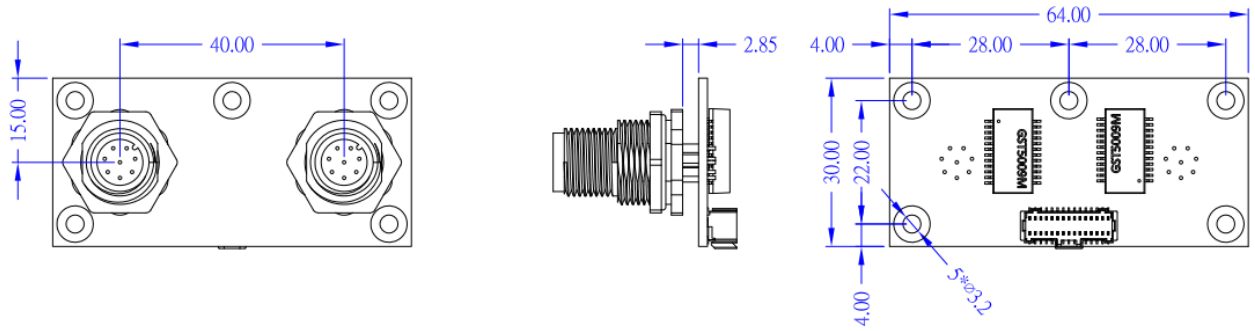

MT321-R

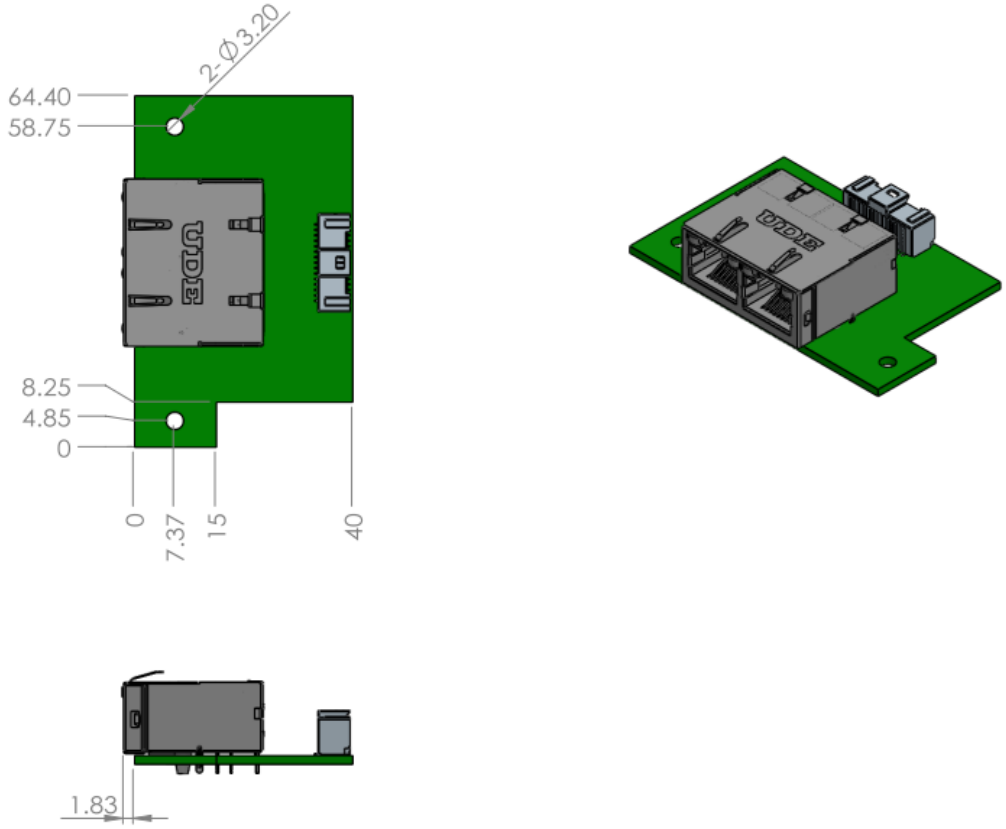

MT321-M20

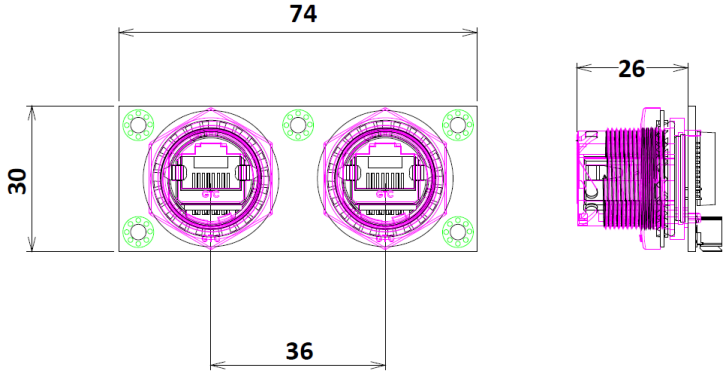

Chapter 2: Connectors pin definition

2.1 Connectors list

Label	Function	Note
J1	Board to board connector	MT321, MT321-R, MT321-M
LAN1, LAN2	M12 connector	MT321-M
LAN1, LAN2	RJ45 connector	MT321-R
LAN1, LAN2	M20 Shielded RJ45 connector	MT321-M20
JLAN1	BOX Header to MT321	MT321-P
LAN1, LAN2	BOX Header connector LAN	MT321-P

2.2 Connector pin definition

J1: board to board connector

PIN	DEFINITION	PIN	DEFINITION
1	LAN2_MDI0_DP	2	LAN1_MDI0_DP
3	LAN2_MDI0_DN	4	LAN1_MDI0_DN
5	LAN2_MDI1_DP	6	LAN1_MDI1_DP
7	LAN2_MDI1_DN	8	LAN1_MDI1_DN
9	LAN2_MDI2_DP	10	LAN1_MDI2_DP
11	LAN2_MDI2_DN	12	LAN1_MDI2_DN
13	LAN2_MDI3_DP	14	LAN1_MDI3_DP
15	LAN2_MDI3_DN	16	LAN1_MDI3_DN
17	GND	18	GND
19	LAN2_1.5V	20	LAN1_1.5V
21	LAN2_ACT#	22	LAN1_ACT#
23	+3.3V	24	+3.3V
25	LAN2_LED_100#	26	LAN1_LED_100#
27	LAN2_LED_1000#	28	LAN1_LED_1000#
29	GND	30	GND

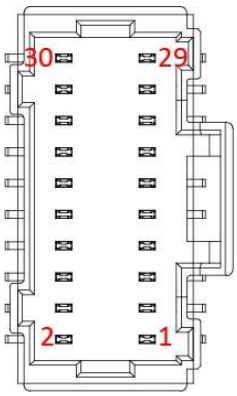

LAN1, LAN2: M12 connector

PIN	DEFINITION	
1	BI_D0-	RJ45-PIN2
2	BI_D0+	RJ45-PIN1
3	BI_D1-	RJ45-PIN6
4	BI_D1+	RJ45-PIN3
5	BI_D2-	RJ45-PIN8
6	BI_D2+	RJ45-PIN7
7	BI_D3-	RJ45-PIN4
8	BI_D3+	RJ45-PIN5

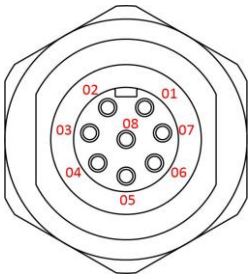

LAN2: RJ45 connector

LAN2			
PIN	DEFINITION	PIN	DEFINITION
A1	LAN1_MDI0_DP	B1	LAN2_MDI0_DP
A2	LAN1_MDI0_DN	B2	LAN2_MDI0_DN
A3	LAN1_MDI1_DP	B3	LAN2_MDI1_DP
A4	LAN1_MDI1_DN	B4	LAN2_MDI1_DN
A7	LAN1_MDI2_DP	B7	LAN2_MDI2_DP
A8	LAN1_MDI2_DN	B8	LAN2_MDI2_DN
A9	LAN1_MDI3_DP	B9	LAN2_MDI3_DP
A10	LAN1_MDI3_DN	B10	LAN2_MDI3_DN

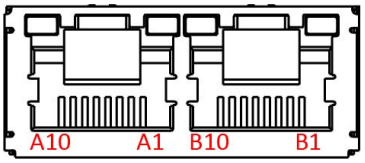

2.3 MT321-P Connector pin definition

JLAN1: Box Header to MT321

PIN	DEFINITION	PIN	DEFINITION
1	LAN2_MDI0_DP	2	LAN1_MDI0_DP
3	LAN2_MDI0_DN	4	LAN1_MDI0_DN
5	LAN2_MDI1_DP	6	LAN1_MDI1_DP
7	LAN2_MDI1_DN	8	LAN1_MDI1_DN
9	LAN2_MDI2_DP	10	LAN1_MDI2_DP
11	LAN2_MDI2_DN	12	LAN1_MDI2_DN
13	LAN2_MDI3_DP	14	LAN1_MDI3_DP
15	LAN2_MDI3_DN	16	LAN1_MDI3_DN
17	GND	18	GND
19	LAN2_1.5V	20	LAN1_1.5V
21	LAN2_ACT#	22	LAN1_ACT#
23	+3.3V	24	+3.3V
25	LAN2_LED_100#	26	LAN1_LED_100#
27	LAN2_LED_1000#	28	LAN1_LED_1000#
29	GND	30	GND

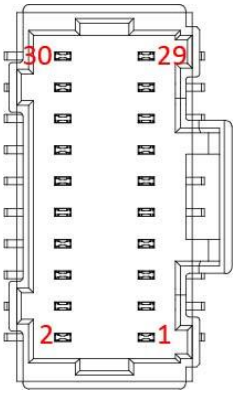

MT321-P LAN1/LAN2: Box Header

PIN	DEFINITION	PIN	DEFINITION
1	LAN_MDXP0	2	NC
3	LAN_MDXN0	4	NC
5	LAN_MDXP1	6	NC
7	LAN_MDXN0	8	NC
9	LAN_MDXP2	10	NC
11	LAN_MDXN2	12	NC
13	LAN_MDXP3	14	NC
15	LAN_MDXN3	16	NC
17	NC	18	NC
19	NC	20	NC
21	NC	22	NC
23	NC	24	NC
25	NC	26	NC
27	NC	28	NC
29	NC	30	NC

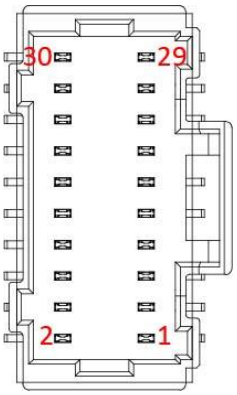

Chapter 3: Getting Started

Disconnect all power supplies to the board before installing a module to prevent damage to the board and module.

3.1 Installing the Mini PCIe module

1. Align the notch on the Mini PCIe module with the counterpart on the Mini PCIe slot then insert the module at 30° angle.

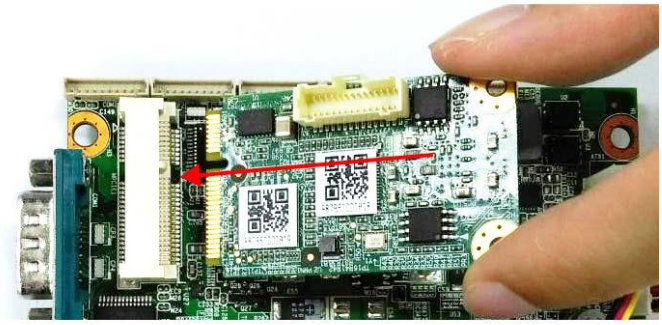

2. Once MT321 has been fully inserted, push down the module until the screw holes align with the mounting holes. Secure the module with screws to the standoffs.

3.2 Connect MT321 and MT321-R

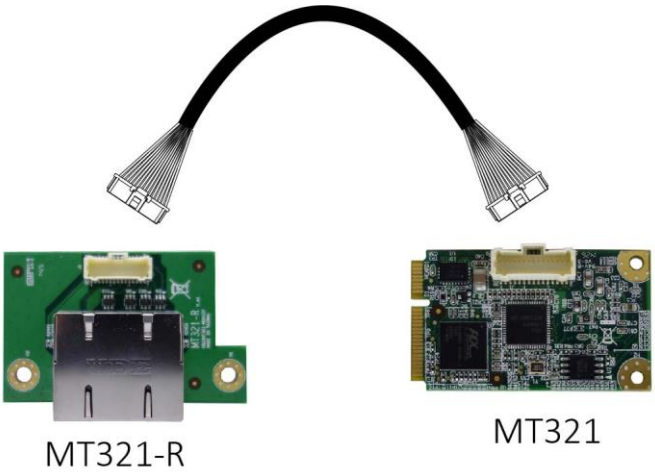

3.3 Connect MT321 and MT321-M

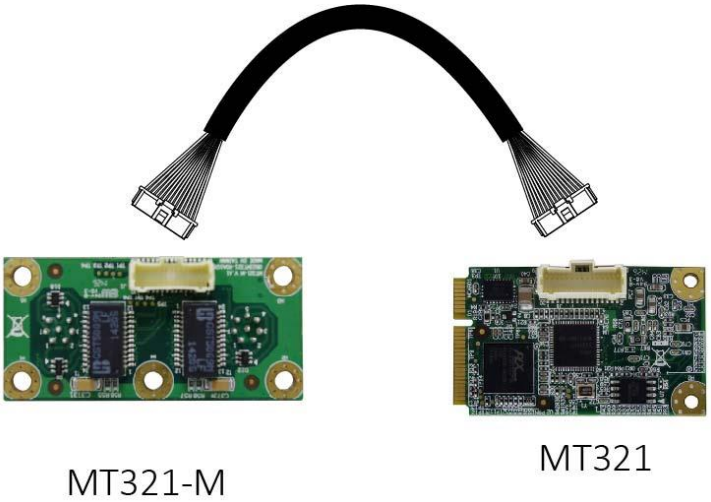
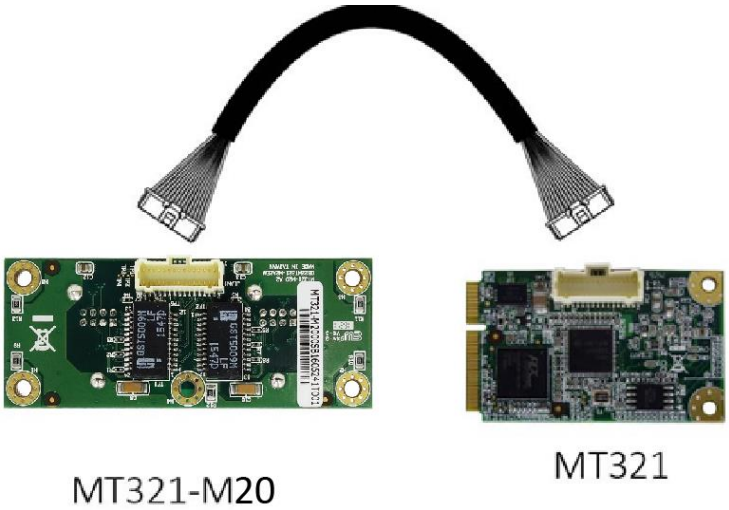
3.4 Connect MT321 and MT321-M20