PERFECTRON

OXY5739A

Intel® 6th Gen. Skylake-H® Core™ i7 processors

32GB DDR 4, uSSD 64GB on board , PCIe/104 and mPCIe expansion,

Extended Temperature -40 to 85°C

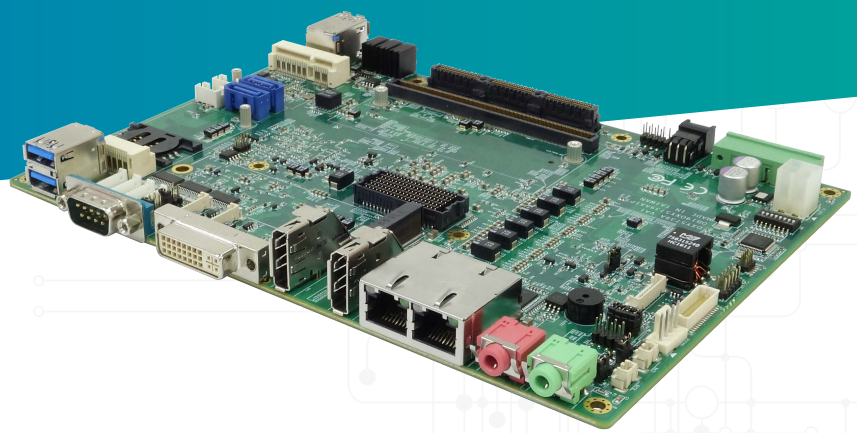

Extended Temperature +85°C -40°C

CPU Full Speed HIGH

- Support Intel® Skylake-H Core™ i7-6820EQ Processor
- Apacer/Smart uSSD 64GB (SATA III)
- 1 x XR-DIMM, 1 x SO-DIMM up to DDR4-2133 32GB SDRAM
- 2 x Mini PCIe
- Multi display: 2 x DisplayPort; 1 x DVI-D; Dual Channel 24 Bit LVDS
- Dual LAN Ports (1 x Intel I210-IT & 1 x I219-LM GbE)
- 8 x USB ports: 4 x USB 3.0, 4 x USB 2.0
- Extended operating temp. -40~+85°C

© Copyright PERFECTRON Co., Ltd. All Rights Reserved .

OXY5739A

PERFECTRON

Specification

System	
CPU	Intel® Skylake-H Core™ Processor
	Intel® Core™ i7-6820EQ (8M Cache, up to 3.50 GHz)
Memory Type	1 x XR-DIMM up to 16 GB 1 x SO-DIMM up to 16 GB
NAND Flash	64 GB SATA SSD Oboard
BIOS	AMI® UEFI BIOS
Watchdog	1-255 sec. or 1-255 min. software programmable, can generate system reset
Expansion Slot	PCIe/104+ FPE
	1 x Full-size mPCIe/mSATA 1 x Half-size mPCIe
Display	
Chipset	Intel® HD Graphics
DisplayPort	2, Max resolution up to 3840 x 2160
DVI-D	1, Max resolution up to 2048 x 1536
LVDS	Dual channel 24bit LVDS
Ethernet	
Chipset	1 x Intel I210-IT & 1 x I 219-LM GbE
WOL	Yes
Boot from LAN	Yes for PXE
Audio	
Codec	Realtek ALC888S

External I/O	
DisplayPort	2, Max resolution up to 3840 x 2160
DVI-D	1, Max resolution up to 2048 x 1536
Ethernet	2 x RJ45
USB 3.0	4 (2 On both side)
Audio Jack	Mic-In, Line-Out
COM	1 x RS-232/422/485 (1 with 5V/12V Selectable)
Serial Signals	RS232: DCD-, RXD, TXD, DTR-, GND, DSR-, RTS-, CTS-
	RS422: TX-, RX+, TX+, RX-, GND
	RS485: DATA-, DATA+, GND
Power Connector	4-pin Terminal Block
Internal I/O	
SATA	2 x SATAIII (6Gb/s, RAID 0/1)
COM	3 x RS-232 (1 with 5V/12V Selectable)
USB 2.0	4
SIM card holder	1
DIO	2 x 5-pin, 6 in / 2 out With Isolation
LPC	1 x 10-pin
LVDS	1 (2 x 15-pin)
Mechanical and Environment	
Form Factor	EBX SBC
Power Type	12V DC-in
Dimension	203mm x 146 mm
Operating Temp.	-40 to 85°C
Storage Temp.	-40 to 85°C
Relative Humidity	10% to 90%, non-condensing

© Copyright PERFECTRON Co., Ltd. All Rights Reserved .

Block Diagram

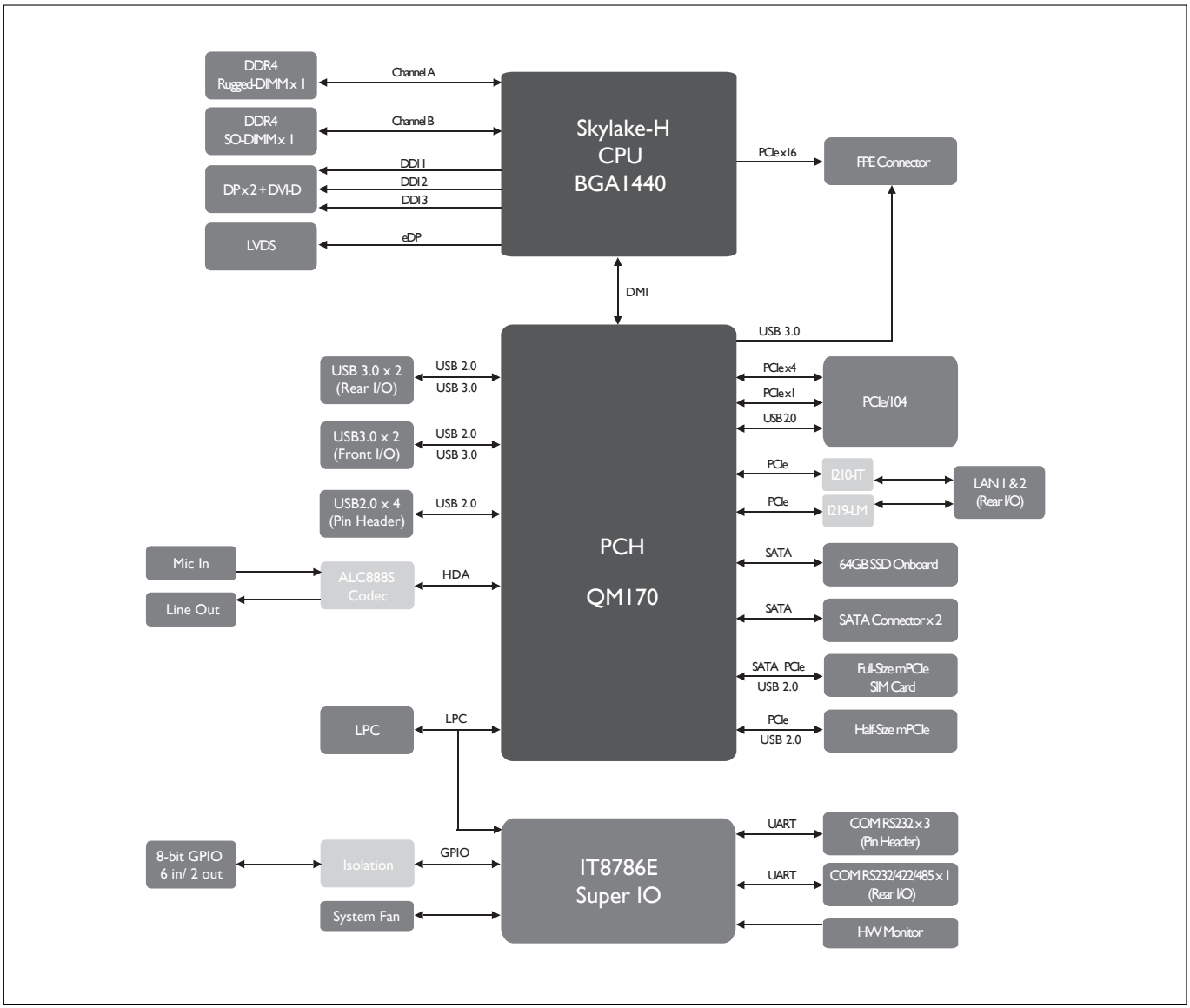

Ordering Information

OXY5739A-01

Intel® QM170 EBX SBC, Skylake i7-6820EQ (4C x 3.5/2.8 GHz), 8M Cache, 45W CPU with SSD Soldering Onboard, Stackable with StackPC & FPE Expansion. Extended Temperature -40°C to 85°C

© Copyright PERFECTRON Co., Ltd. All Rights Reserved .